DALI-2 · DEVICE TYPE 7 · RELAY MODULE

WS-DT7-R1

DALI-2 relay module for switching loads without a DALI input · bus powered · wall-box size

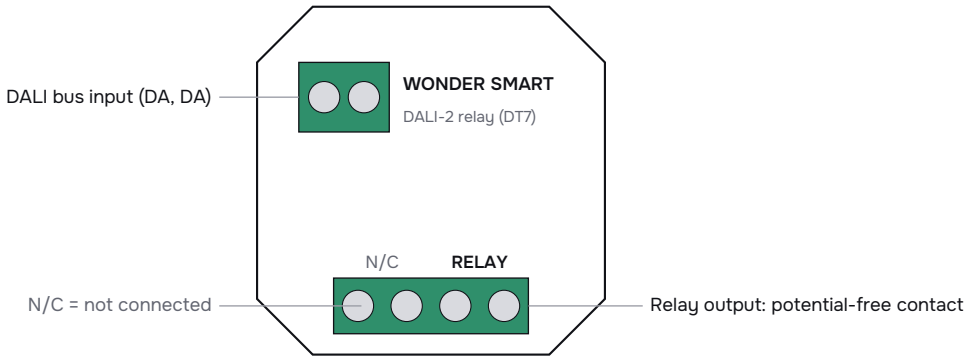

DALI-2	1	4.3 A	250 VAC	< 3 mA	45 × 45
DT7 switching device	DALI address	max. resistive load	/ 30 VDC max.	DALI consumption	mm, wall-box size

1 Features

- DALI-2 relay module to IEC 62386-101, -102 and -208 (device type 7, switching function).
- Powered from the DALI bus: no separate power supply needed.
- One DALI short address, assigned automatically by the DALI master during addressing.
- Switches loads without a DALI input on and off from the DALI system.
- Can switch a standard contactor coil to control larger loads.
- Works with standard DALI-2 masters and controllers.
- Compact size for installation in a standard wall box.

2 Safety

Disconnect all power before installation or wiring. Do not install with power applied to the device.

Keep dry. Do not expose the device to moisture. Indoor use only, IP20.

Installation must be carried out by a qualified electrician in line with local wiring rules.

3 Dimensions

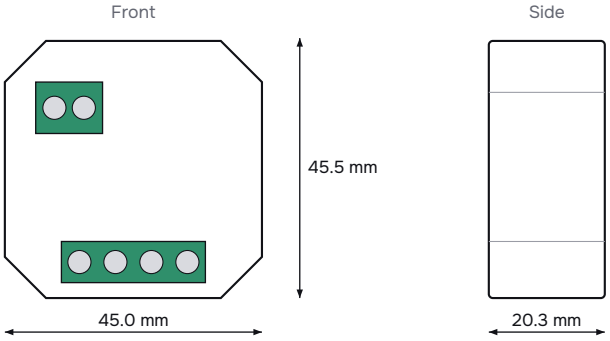

Fits a standard round or square wall box.

4 Specification

Model		WS-DT7-R1 · DALI-2 relay module, device type 7
INPUT	Control input	DALI, 1 input (DA, DA, non-polarised)
	DALI consumption	< 3 mA
	DALI addresses	1
	Standards	IEC 62386-101, IEC 62386-102, IEC 62386-208
OUTPUT	Contact	1 relay contact, potential-free
	Switching voltage	max. 250 VAC / max. 30 VDC
	Switching current	Resistive max. 4.3 A · capacitive max. 1.3 A · inductive max. 4.3 A
	Default state	Normally closed (factory setting)
GENERAL	Dimensions	45.0 × 45.5 × 20.3 mm
	Ingress protection	IP20, indoor use
	Mounting	Standard wall box

5 Compatible loads

	Load type	Examples	Max. load
	**Resistive**	Incandescent and halogen lamps	1000 W @ 230 VAC 500 W @ 110 VAC
	**Capacitive**	LED drivers and lamps, electronic transformers, fluorescent lamps with electronic ballast	300 W @ 230 VAC 150 W @ 110 VAC
	**Inductive**	Ferromagnetic transformers, contactor coils	1000 W @ 230 VAC 500 W @ 110 VAC

LED loads have high inrush currents: keep within the capacitive rating, or switch a contactor for larger LED groups.

6 Wiring

6.1 Switching a 100 – 240 VAC load

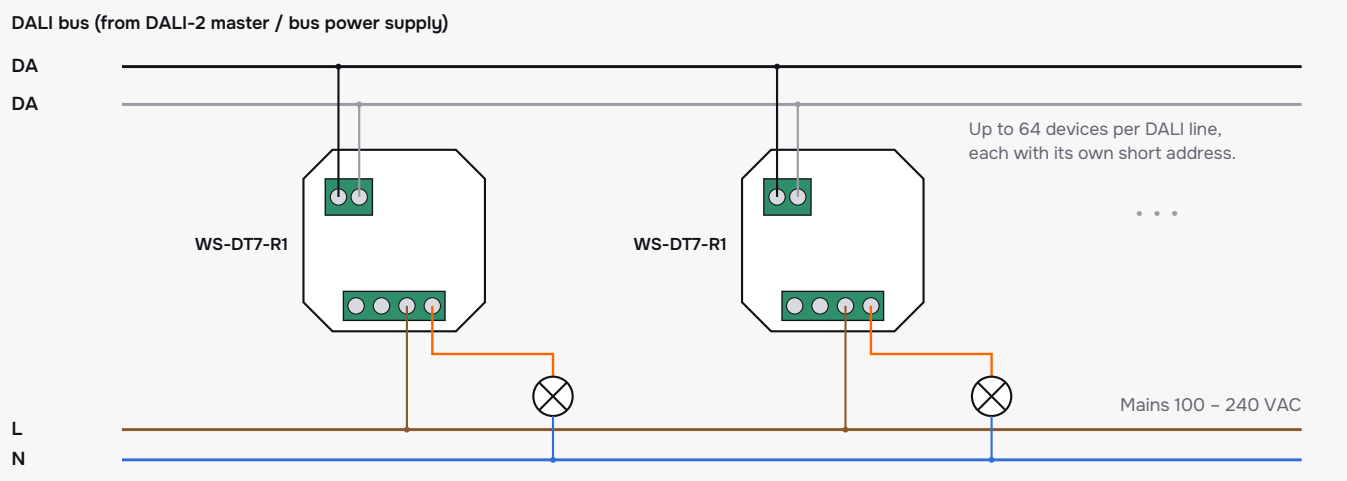

6.2 Switching a 12 / 24 VDC load

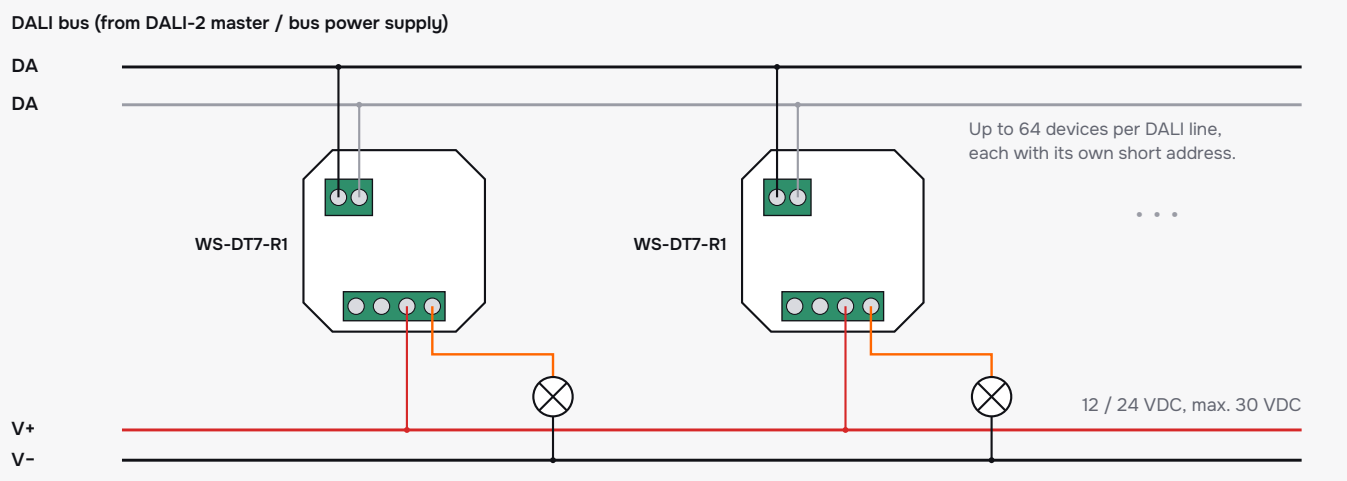

The relay contact is wired in series with the load supply (L or V+). The two N/C terminals are not connected. The DALI terminals are not polarised.

7 Commissioning

1 Switch off all power. Wire the DALI bus and the load as shown above.
2 Switch on the load supply and the DALI bus power supply.
3 Run addressing from the DALI-2 master. The module receives one short address automatically.
4 Add the address to groups and scenes in the master, then test on/off from the DALI system.

For addressing and group set-up, follow the instructions of the DALI master used.

8 Support

Wonder Smart · Office 501, Sheikha Noora Tower, Sheikh Zayed Road, Barsha Heights, Dubai, U.A.E. · info@wondersmart.io · +971 (0) 4 410 6965
Specifications are subject to change without notice. © Wonder Smart.