LED DRIVER · DALI-2 DT6 · CONSTANT VOLTAGE

WS-DT6-072

72 W dimmable constant-voltage LED driver · 24 VDC · DALI-2 and Push DIM · IP67

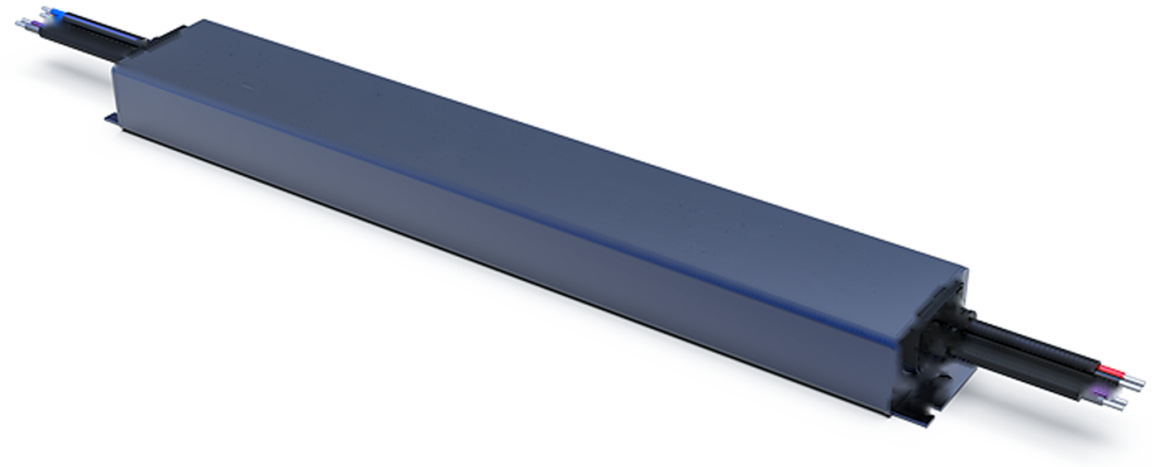

72 W	0.1–100 %	PF > 0.96	THD < 10 %	IP67	Flicker-free
max. output power	dimming range	at 230 VAC, full load	at 230 VAC, full load	aluminium housing	IEEE 1789

1 Features

- Smooth dimming from 0.1 % to 100 %; LED start from 0.1 %.
- Flicker-free across the full dimming range, high-frequency exemption level to IEEE 1789.
- Two control interfaces: DALI-2 (DT6) and Push DIM from a standard momentary push button.
- High efficiency with PF > 0.96 and THD < 10 %.
- Over-load, over-temperature, short-circuit and over-voltage protection.
- Suitable for built-in use in Class I, II and III luminaires.
- SELV output, IP67 sealed aluminium housing.
- Up to 50,000 hours lifetime.

2 Ordering information

Model	Output	Current	Efficiency
WS-DT6-072	24 VDC / 72 W	max 3 A	89 % (TBC)

Dimensions: 287 × 35 × 18 mm (L × W × H) (TBC)
Weight: 430 g ± 10 g (TBC)
Input: 100–264 VAC, 50/60 Hz

3 Applications

- Linear LED strips and aluminium profiles
- DALI lighting control in residential and hospitality projects
- Cove, cornice and architectural accent lighting
- Damp and outdoor locations (IP67)

4 Compliance

DALI-2 DT6	Push DIM	SELV	IP67	CE	RoHS	IEC 61347	IEEE 1789

5 Specification

	Model	WS-DT6-072
OUTPUT	Output voltage	24 VDC
	Voltage tolerance	±0.6 VDC
	Output current	max 3 A
	Output power	max 72 W
	Output power range	0 – 72 W
	Strobe	None (flicker-free)
	Dimming range	0 – 100 %, dimming depth 0.1 %
	Ripple and noise	max 240 mV
	Dimming frequency	4,000 Hz
INPUT	Dimming interface	DALI-2 (DT6) / Push DIM
	Input voltage	100 – 264 VAC
	Frequency	50 / 60 Hz
	Input current	0.86 – 0.31 A (TBC)
	Power factor	PF > 0.96 at 230 VAC, full load
	THD	max 10 % at 230 VAC, full load
	Efficiency (typ.)	89 % (TBC)
	Standby power	< 0.5 W
	Inrush current (typ.)	Cold start 50 A at 230 VAC (TBC)
	Surge capability	L–N: 2 kV
	Leakage current	max 0.5 mA
ENVIRONMENT	Operating temperature	ta: -25 … +50 ˚C; tc: 90 ˚C
	Operating humidity	20 – 95 % RH, non-condensing
	Storage	-40 … +80 ˚C, 10 – 95 % RH
	Vibration	10 – 500 Hz, 2 G, 12 min/cycle, 72 min per X, Y, Z axis
PROTECTION	Over-temperature	Output shuts down; re-power to recover
	Over-voltage	Shutdown at no-load voltage of 28 V and above; re-power to recover
	Over-load	Output shuts down at 110 % load and above; auto-recovery
	Short circuit	Auto-recovery after the fault is removed
SAFETY & EMC	Withstand voltage	I/P – O/P: 3,750 VAC
	Isolation resistance	I/P – O/P: 100 MOhm / 500 VDC / 25 ˚C / 70 % RH
	Safety standards	IEC/EN 61347-1, IEC/EN 61347-2-13
	EMC emission	EN 55015, EN 61000-3-2 Class C, EN 61000-3-3
	EMC immunity	EN 61000-4-2, 3, 4, 5, 6, 8, 11; EN 61547
	Flicker	IEEE 1789
MECHANICAL	Dimensions (L × W × H)	287 × 35 × 18 mm (TBC)
	Mounting hole pitch	265 mm (TBC)
	Ingress protection	IP67
	Weight	430 g ± 10 g (TBC)
	Input cables	AC 3 × 0.75 mm², DALI 2 × 0.5 mm², 250 mm
	Output cable	2 × 1.0 mm², 250 mm (TBC)
	Lifetime	up to 50,000 h

All data measured at 230 VAC input, rated load and 25 ˚C ambient unless otherwise stated. Specifications are subject to change without notice. Values marked TBC are preliminary and will be confirmed.

6 Dimensions

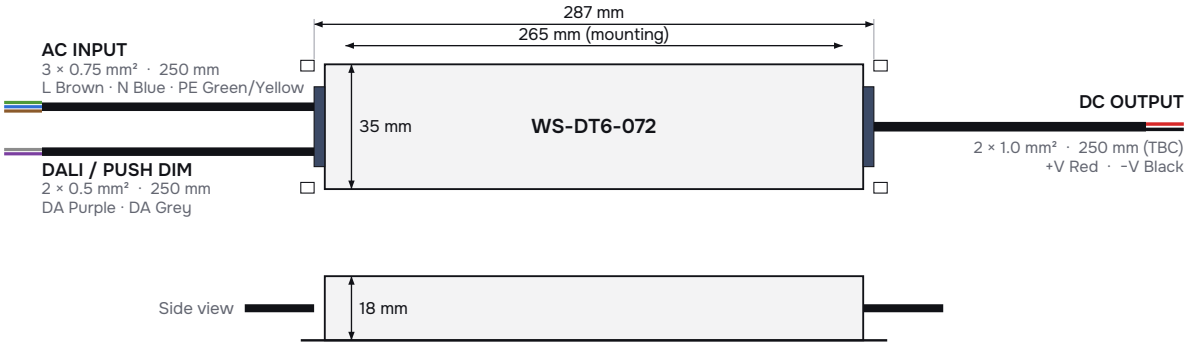

Unit: mm. Drawing not to scale. Dimensions to be confirmed (TBC).

7 Wiring diagram

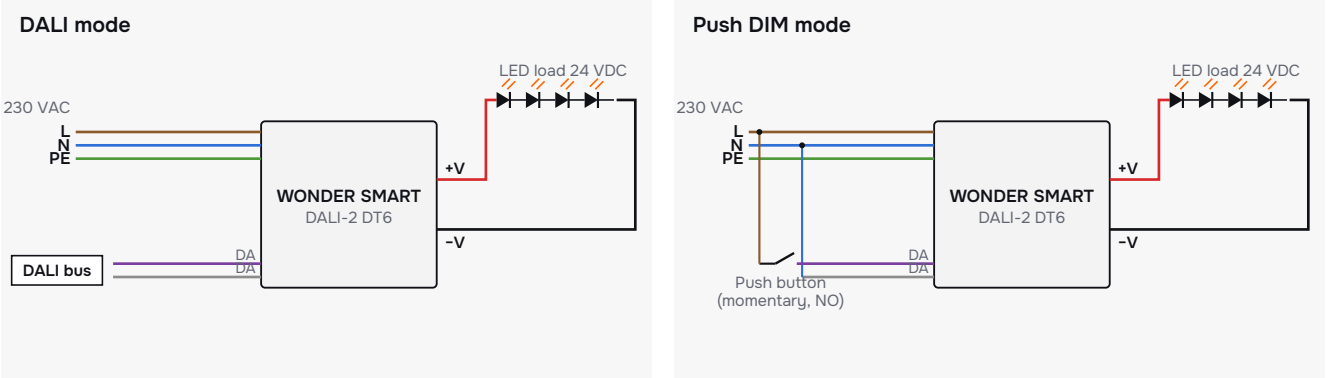

Push DIM operation. **Short press:** on / off · **Long press:** stepless dimming; each new long press reverses the direction · **Memory:** the light returns to the last brightness level when switched on · **Priority:** DALI control has priority over Push DIM

8 Performance

Efficiency vs load · 230 VAC / 50 Hz (TBC)

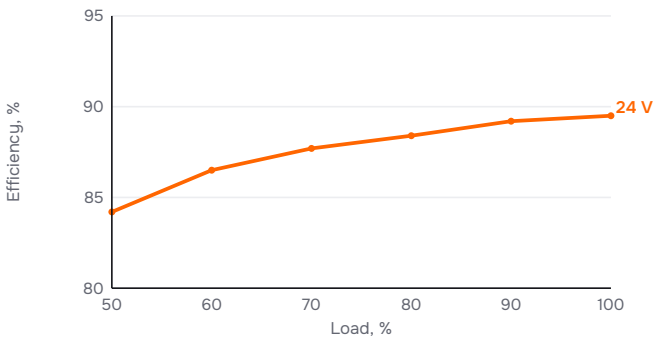

Derating curve

